JIFFY AIR TOOL INC.
2254 CONESTOGA DRIVE
CARSON CITY, NV 89706
775-883-1072
www.jiffyairtool.com

5429 E - 1
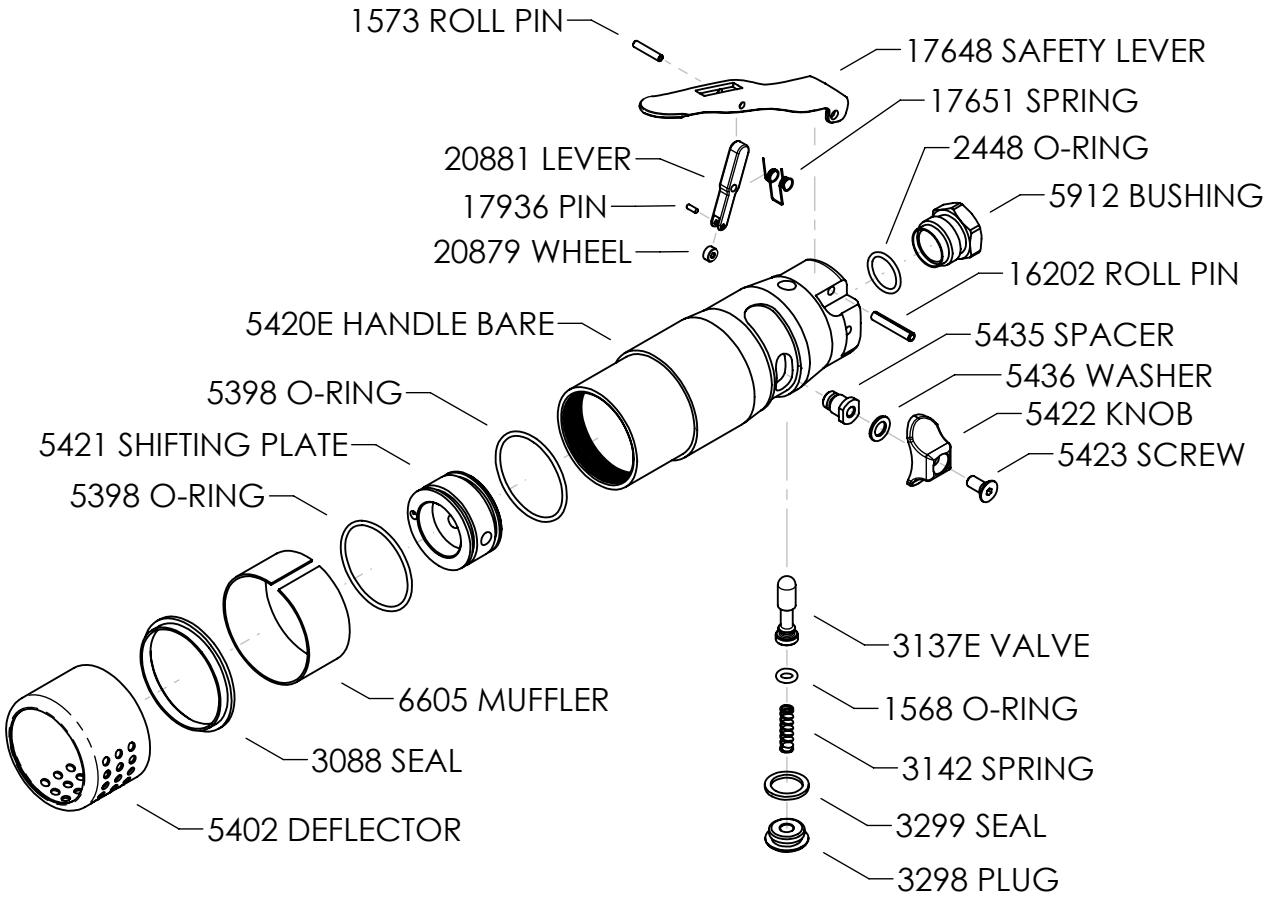
SRD2 HANDLE ASSEMBLY
- WITH SAFETY LEVER -